RevNr.	Revision note	Date	Sign

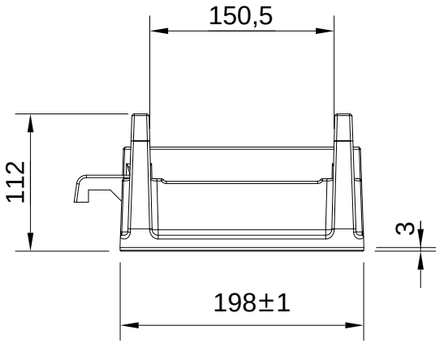

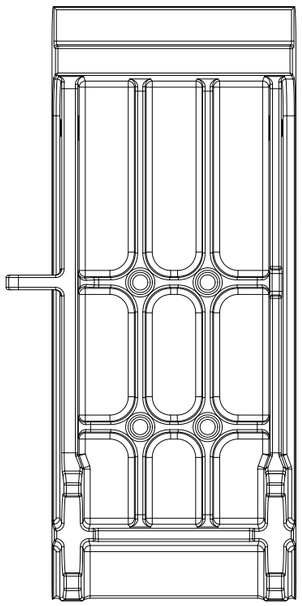

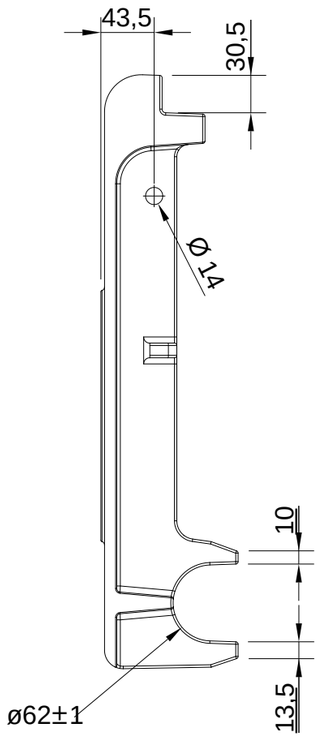

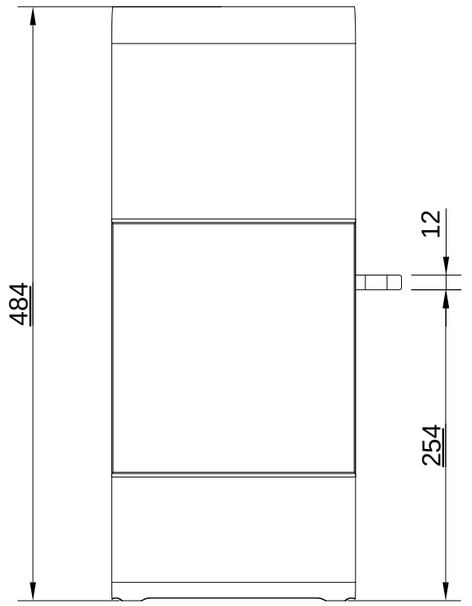

	IKEA Industry Hultsfred				
E	A3	General Tolerances acc to :			
	Scale 1:5	SS ISO8062-CT10	Drawn SH	Checked Checked	Dat. 14/05-2016
AB Bruzaholms Bruk	Title **Z1011**			Sheet 1 of 1	Rev.
				Doc.Nr Z1011	