REVISION HISTORY			
ZONE	REV	DESCRIPTION	DATE

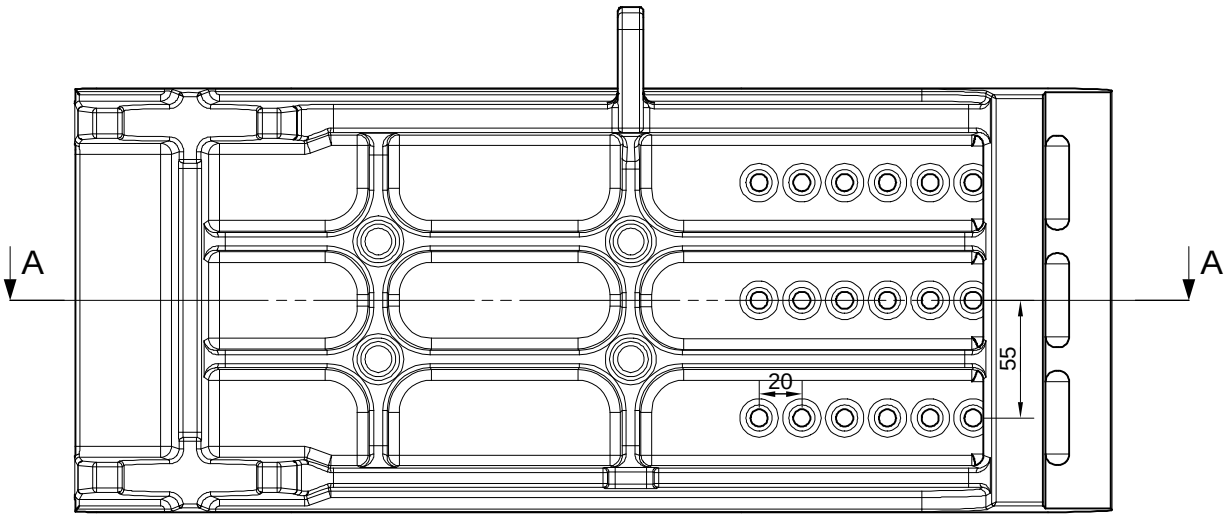

A - A

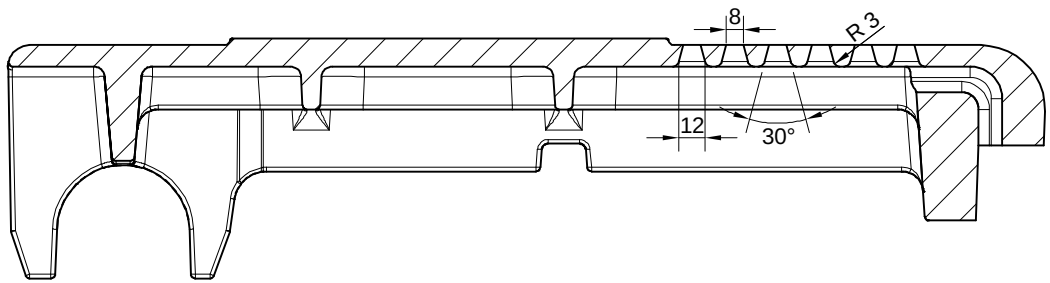

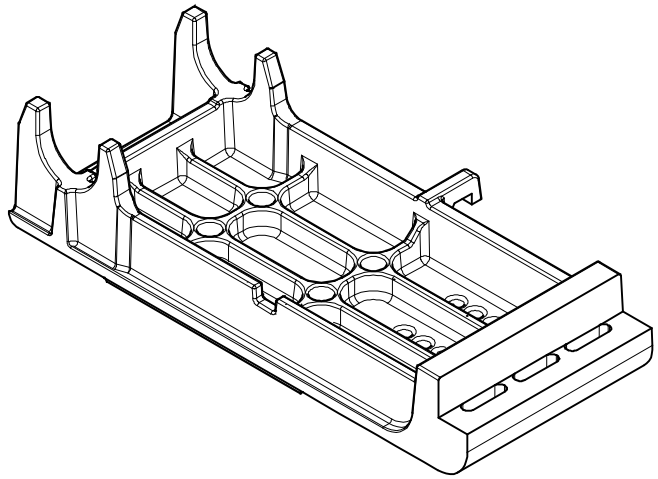

This document and its contents are the exclusive property of AB Bruzaholms Bruk, and may not be copied, reproduced, transmitted or communicated to a third part, or used for any purpose without written permission.

A3 ISO E	IronCAD 2D drawing 3D file available	General Tolerances acc to:	File Name: Z1009 nya hål.icd	Last saved: 2019-05-31 07:56
	Scale: 1 : 2,5	ISO 8062-CT10	Wheight: 19,527 / Material: 1.4777	Created Date: 2019-05-31
AB Bruzaholms Bruk S-570 34 Bruzaholm +46 381 201 80	**Roster** **49**			Sheet No: 1 (1) / Rev. 1 Doc. No: **Z1009**